SYRIUS
Solar Industry

BT-WS 400

Single heat exchanger

The BT-WS series buffer tanks are mainly used for a Solar Energy Combined System (SECS) installation. They allow to combine the production of heating and instantaneous DHW production through a 316L stainless steel coil.

Description

Tank guarantee 5 years

- Buffer tank for SECS, for an instantaneous heating and DHW system, equipped with a coil and a solar heat exchanger.
- Black steel cylinder for technical water
- Zipped PVC cover finish

ECS C

BT-WS 400 liters

Model / reference	400 L
Tank	**BT0400WS90 / BT0400WS180**
Empty weight (kg)	140
Insulation: thickness (mm) / material	50 / polyurethane
Heat dissipation ΔT 45K (W)	127
Cooling constant (Wh/j/l/K)	0.1585
Max. working temperature (°C)	95
Fire-resistance class	M3 en standard
Cylinder	
Capacity (liters)	402
Max. working pressure (bar)	4
Connections	8
DHW stainless steel coil	
Volume contained (liters) / Exchange surface (m^2)	26.2 / 4.2
Power (kW) / Flow (m3/h)	- / -
Pressure loss (kPa) / Max. working pressure (bar)	- / 7
Solar heat exchanger (lower)	
Volume contained (liters) / Exchange surface (m^2)	11.7 / 1.7
Power (kW) / Flow (m^3/h)	- / -
Pressure loss (kPa) / Max. working pressure (bar)	- / 10

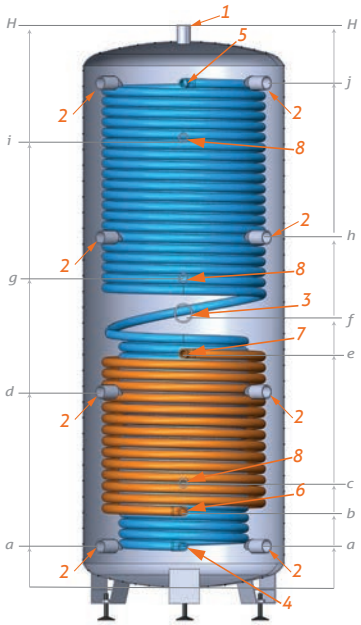

90° heating connection

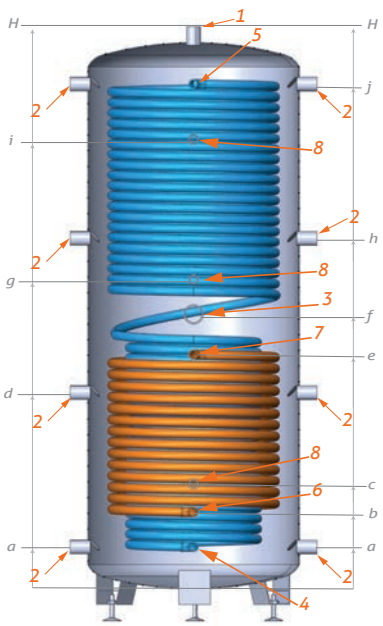

180° heating connection

90° heating connection

180° heating connection

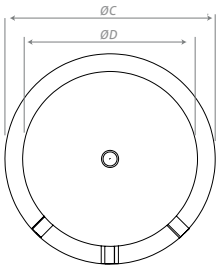

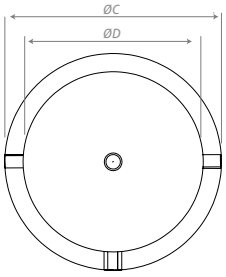

Model	ØC	ØD	H	a	b	c	d	e	f	g	h	i	j
400	700	600	1796	256	356	436	695	804	919	1019	1134	1418	1573

Dimensions (mm)

	Connections	Model 400
1	Steam trap	1"F
2	Generator / heater	1"F
3	Electrical resistance	1"½ F
4	Sanitary cold water inlet	¾"F
5	Sanitary hot water outlet	¾"F
6	Solar energy outlet	¾"F
7	Solar energy inlet	¾"F
8	Probes	½"F

03/2023 - Non-contractual photos and diagrams - Subject to typographical errors and technical changes. Photo credit : iStock

SYRIUS SOLAR INDUSTRY
15 rue du Perpignan - ZAC Descartes
34880 Lavérune - France

+33 (0) 4 67 82 00 18
contact@syrius-solar.fr
SAS with a capital of 150 800 € - RCS Montpellier 794 797 753 00041

www.syrius-solar.fr